01 SMILE-S6-HV System Wiring Diagram with CT

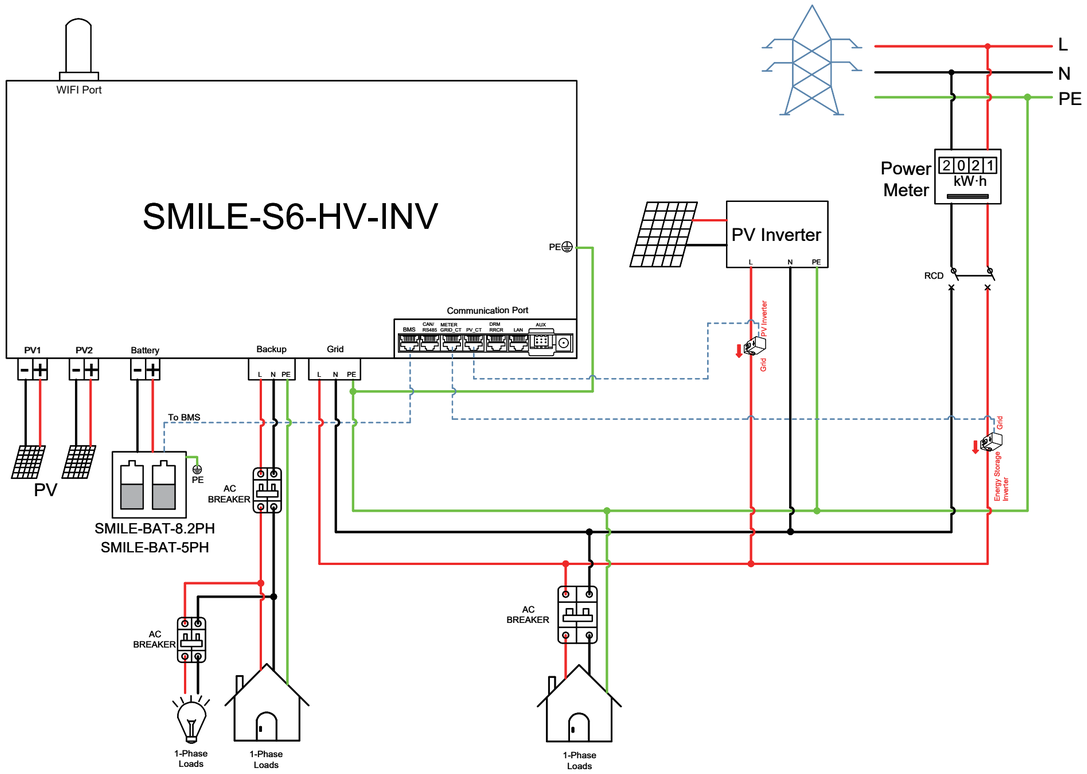

03 SMILE-S6-HV System Wiring Diagram with CHINT Electricity Meter DTSU666 (With CT)

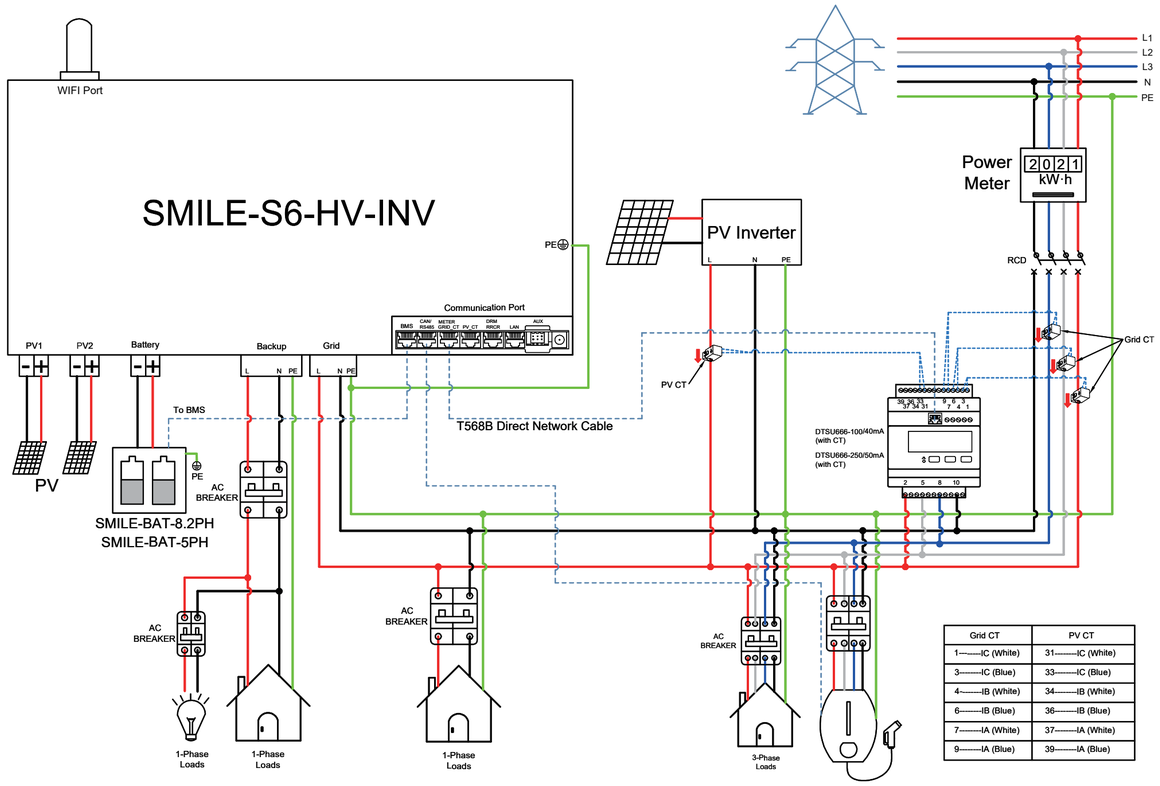

Grid CT	PV CT
1——IC (White)	31——IC (White)
3——IC (Blue)	33——IC (Blue)
4——IB (White)	34——IB (White)
6——IB (Blue)	36——IB (Blue)
7——IA (White)	37——IA (White)
9——IA (Blue)	39——IA (Blue)

02 SMILE-S6-HV System Wiring Diagram with CHINT Electricity Meter DTSU666 (Without CT)

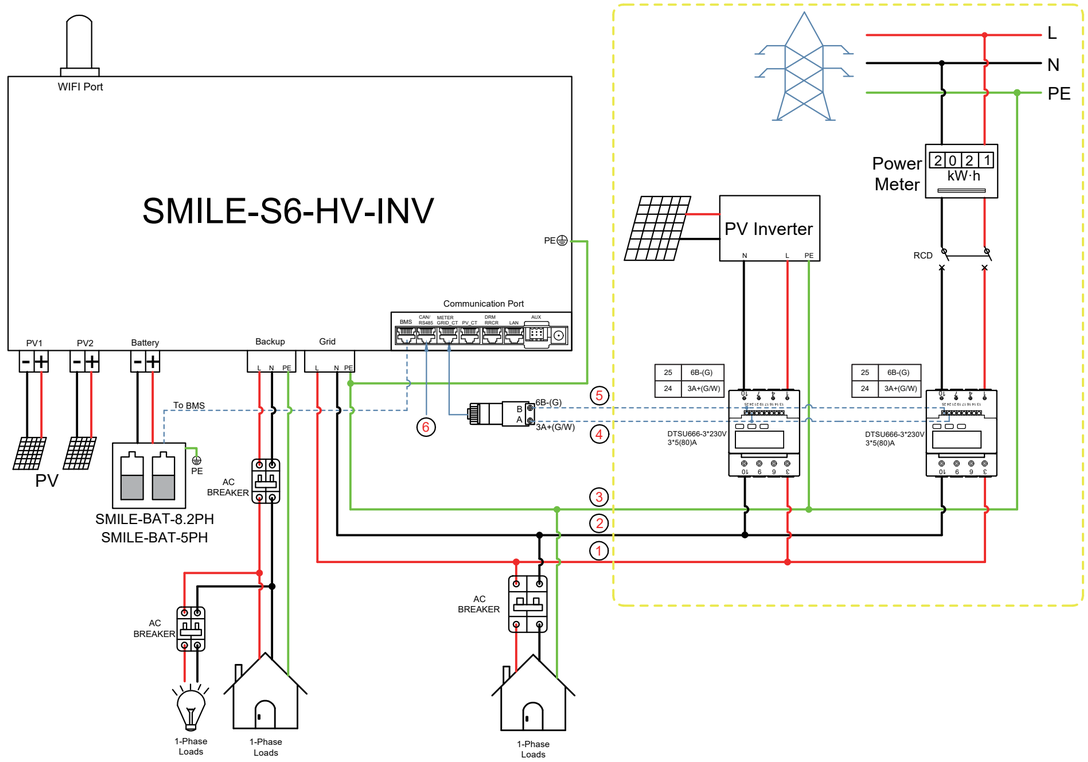

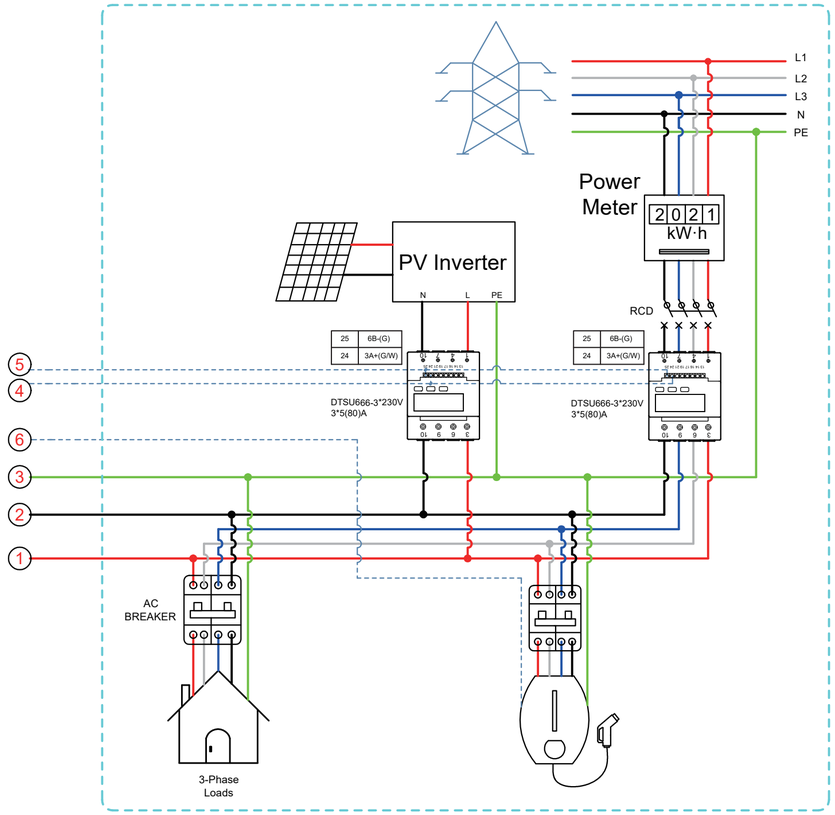

Single phase feed-in.

Three phase feed-in.

04 SMILE-S6-HV System Wiring Diagram with Backup Box Plus

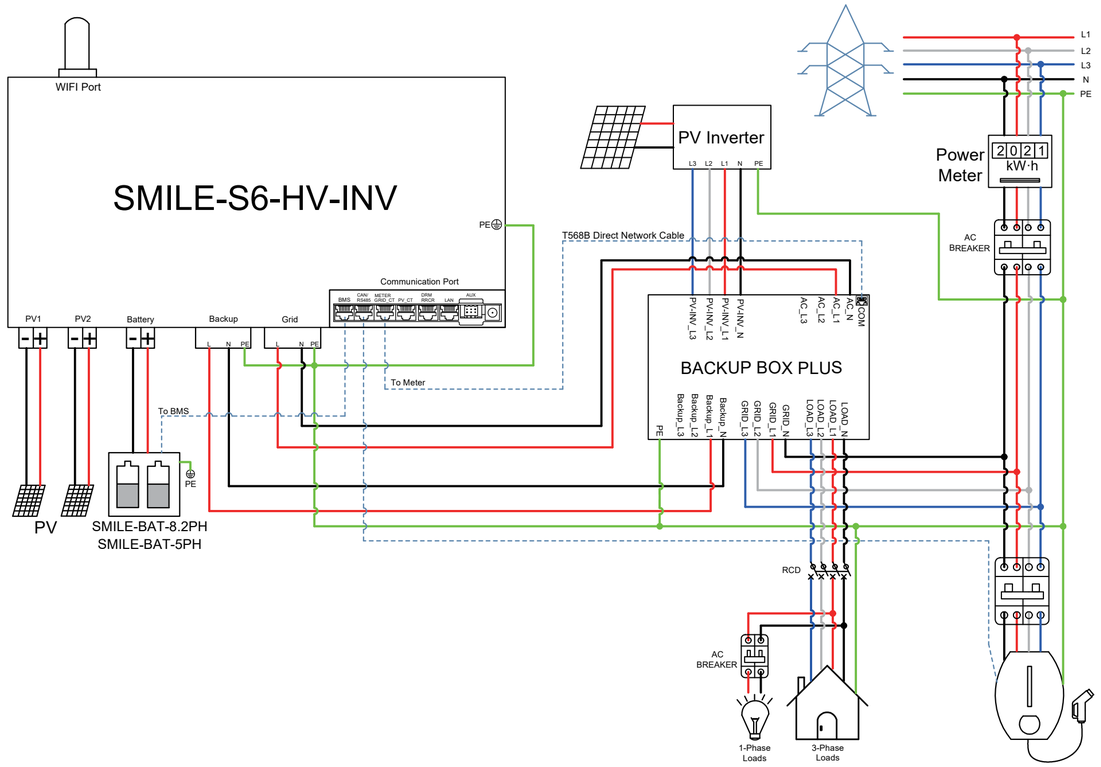

05 SMILE-S6-HV System Wiring Diagram with Backup Box Plus(Heavy Load)

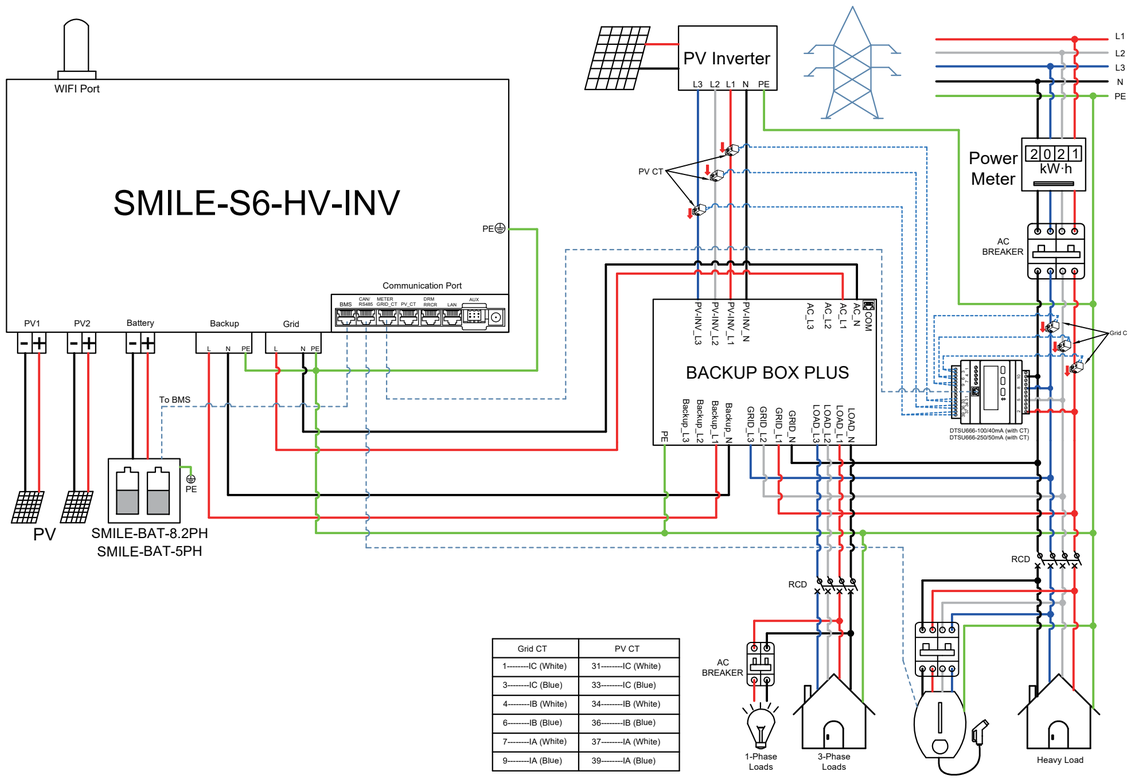

Grid CT	PV CT
1--------IC (White)	31--------IC (White)
3--------IC (Blue)	33--------IC (Blue)
4--------IB (White)	34--------IB (White)
6--------IB (Blue)	36--------IB (Blue)
7--------IA (White)	37--------IA (White)
9--------IA (Blue)	39--------IA (Blue)

06 SMILE-S6-HV System Wiring Diagram with Backup Box

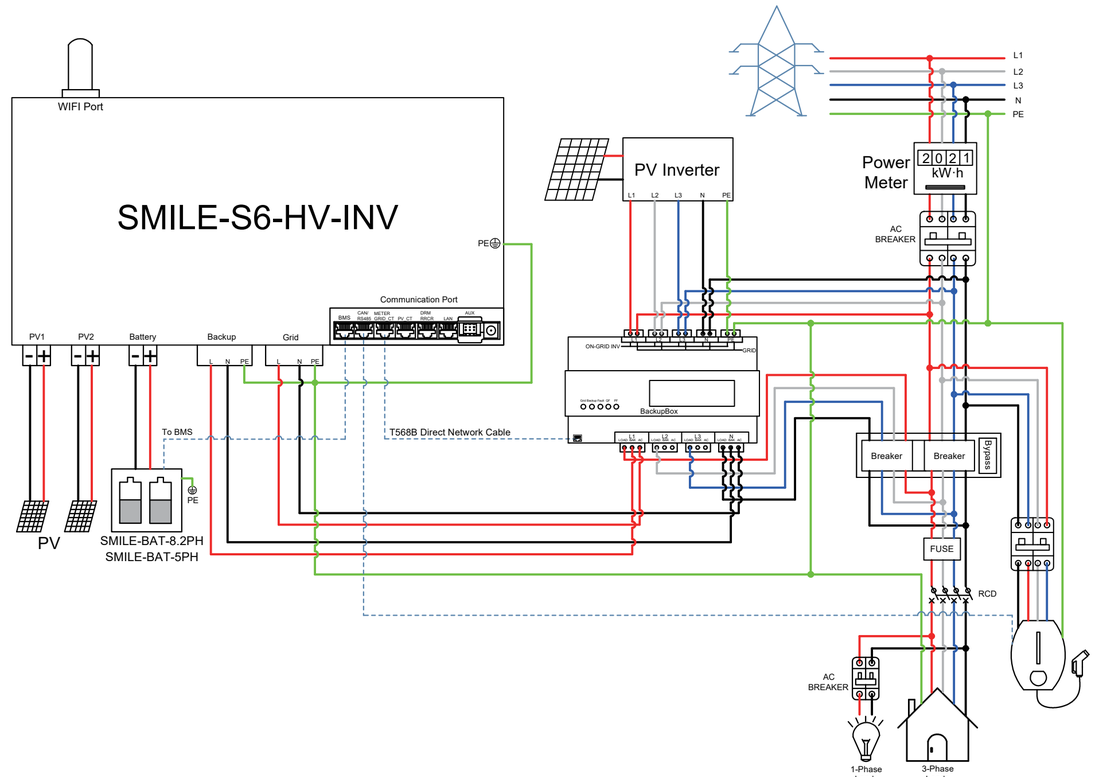

07 SMILE-S6-HV System Wiring Diagram with Backup Box(Heavy Load)

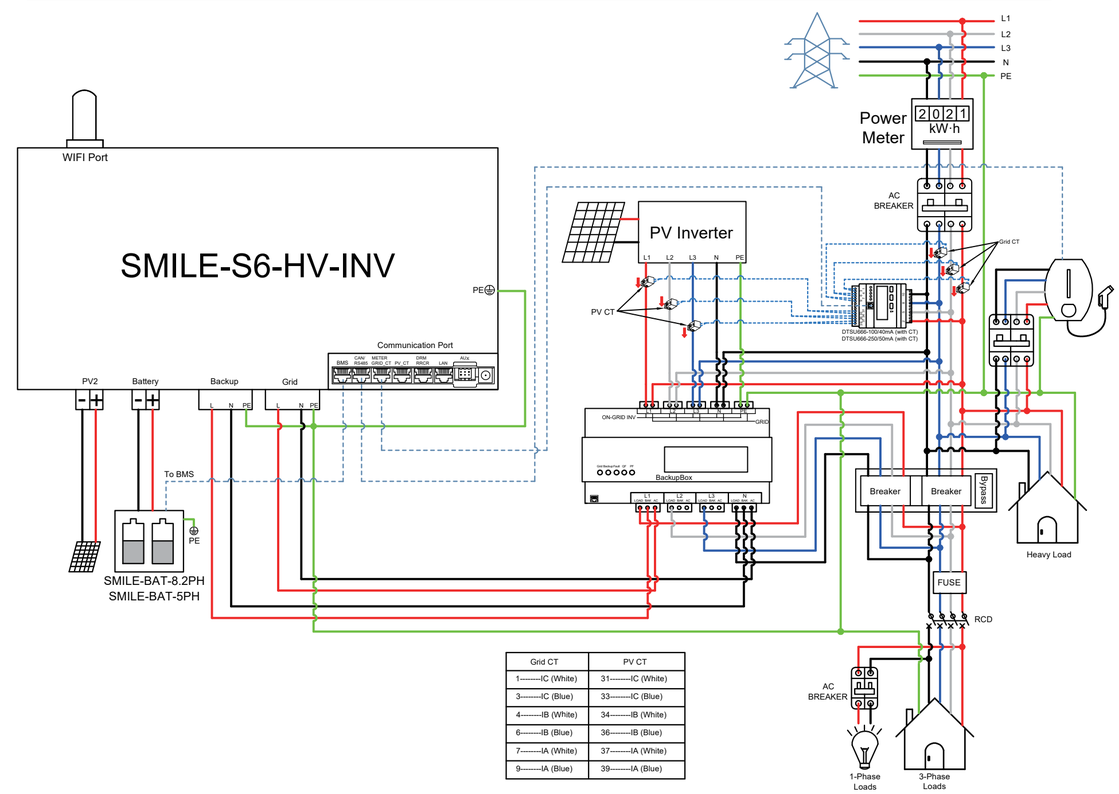

Grid CT	PV CT
1--------IC (White)	31--------IC (White)
3--------IC (Blue)	33--------IC (Blue)
4--------IB (White)	34--------IB (White)
6--------IB (Blue)	36--------IB (Blue)
7--------IA (White)	37--------IA (White)
9--------IA (Blue)	39--------IA (Blue)