01 SMILE-T10/T6-HV System Wiring Diagram with CHINT Electricity Meter DTSU666 (Without CT)

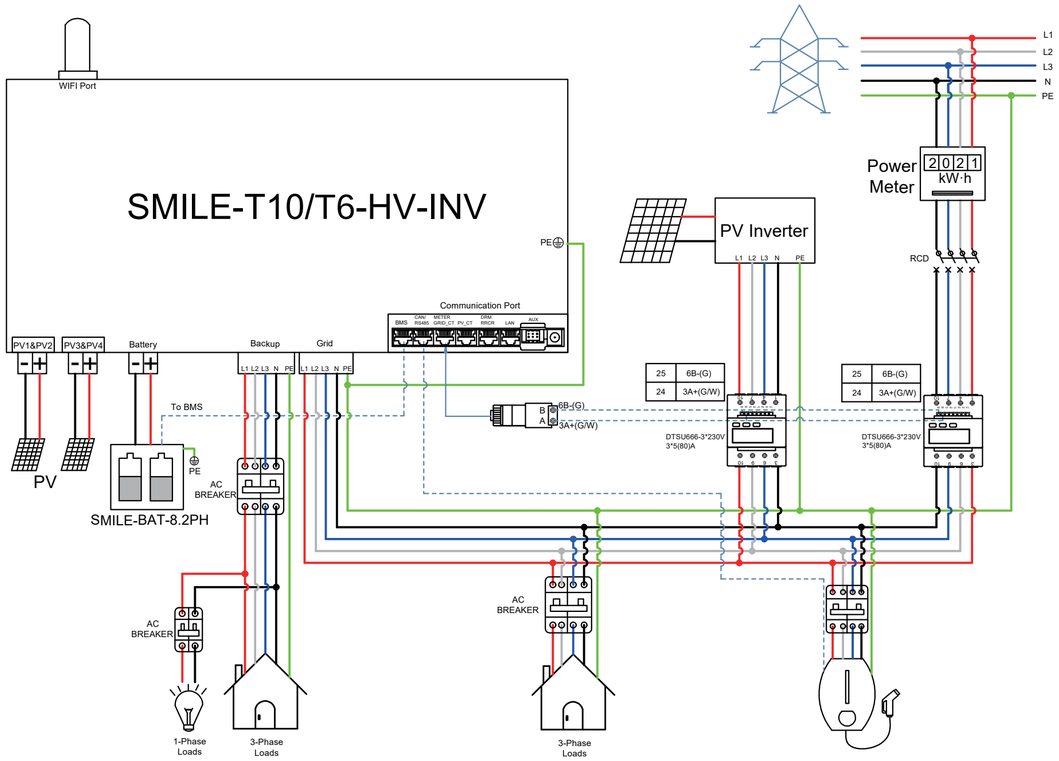

02 SMILE-T10/T6-HV System Wiring Diagram with CHINT Electricity Meter DTSU666 (With CT)

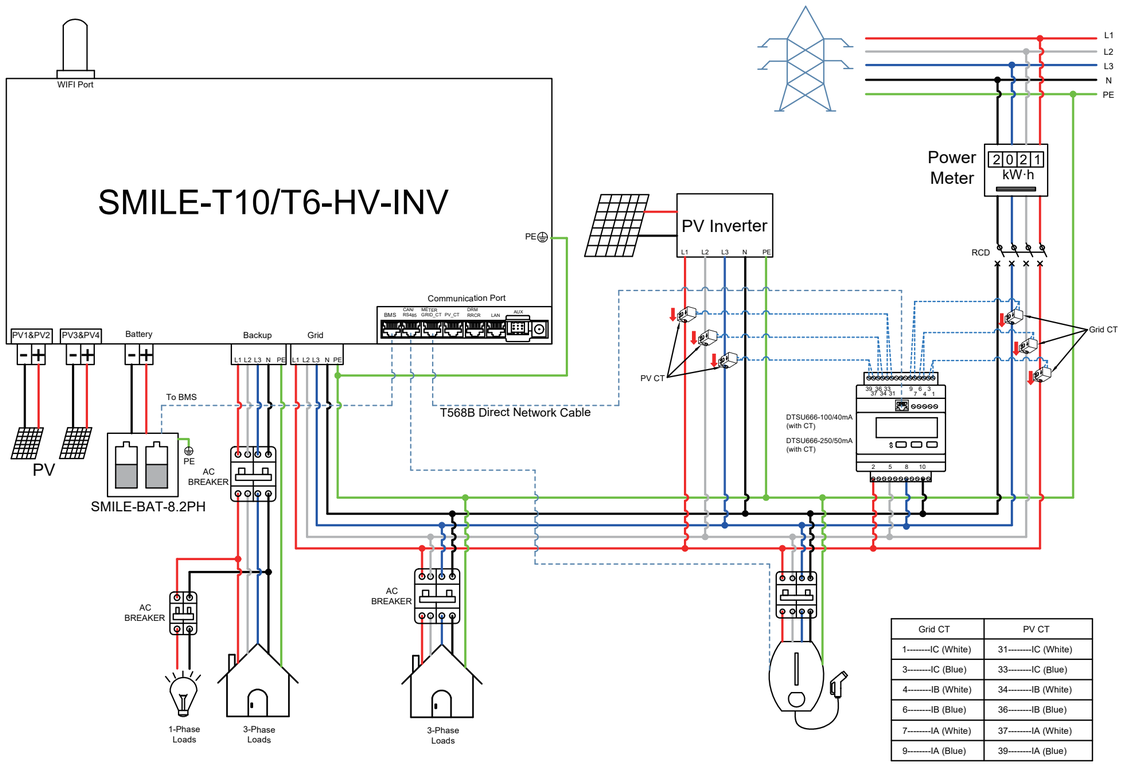

Grid CT	PV CT
1--------IC (White)	31--------IC (White)
3--------IC (Blue)	33--------IC (Blue)
4--------IB (White)	34--------IB (White)
6--------IB (Blue)	36--------IB (Blue)
7--------IA (White)	37--------IA (White)
9--------IA (Blue)	39--------IA (Blue)

03 SMILE-T10/T6-HV System Wiring Diagram with Backup Box Plus

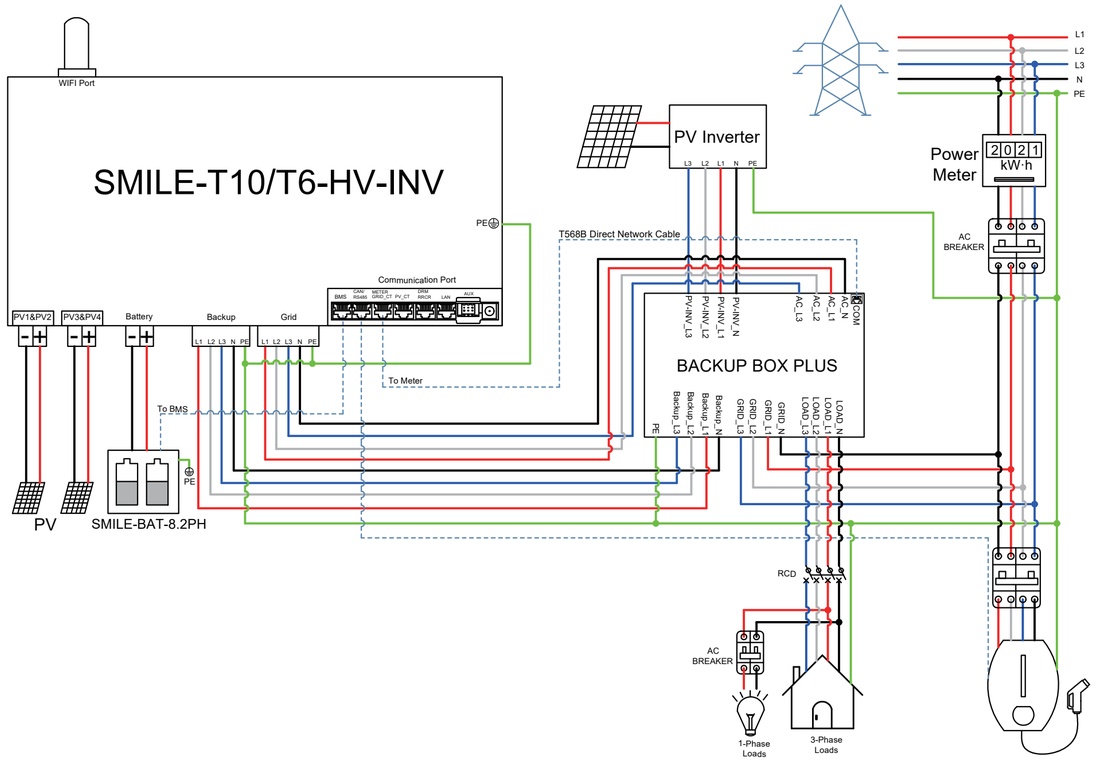

04 SMILE-T10/T6-HV System Wiring Diagram with Backup Box Plus (Heavy Load)

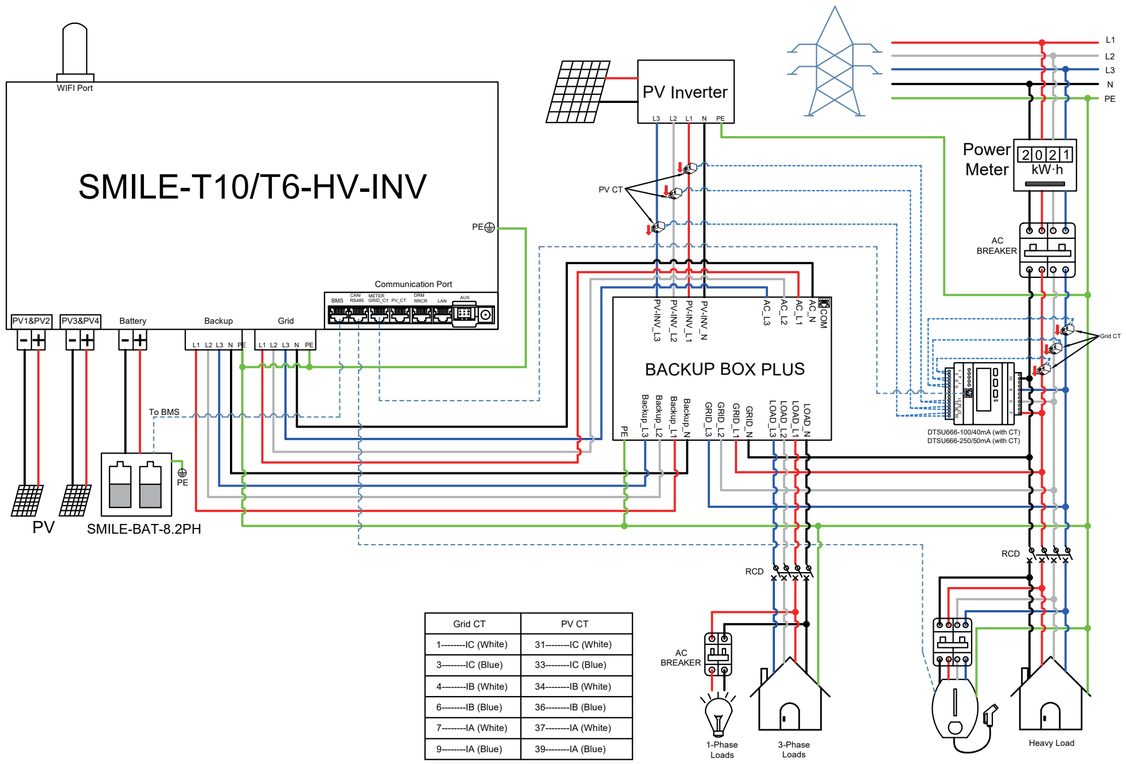

Grid CT	PV CT
1--------IC (White)	31--------IC (White)
3--------IC (Blue)	33--------IC (Blue)
4--------IB (White)	34--------IB (White)
6--------IB (Blue)	36--------IB (Blue)
7--------IA (White)	37--------IA (White)
9--------IA (Blue)	39--------IA (Blue)

05 SMILE-T10/T6-HV System Wiring Diagram with Backup Box

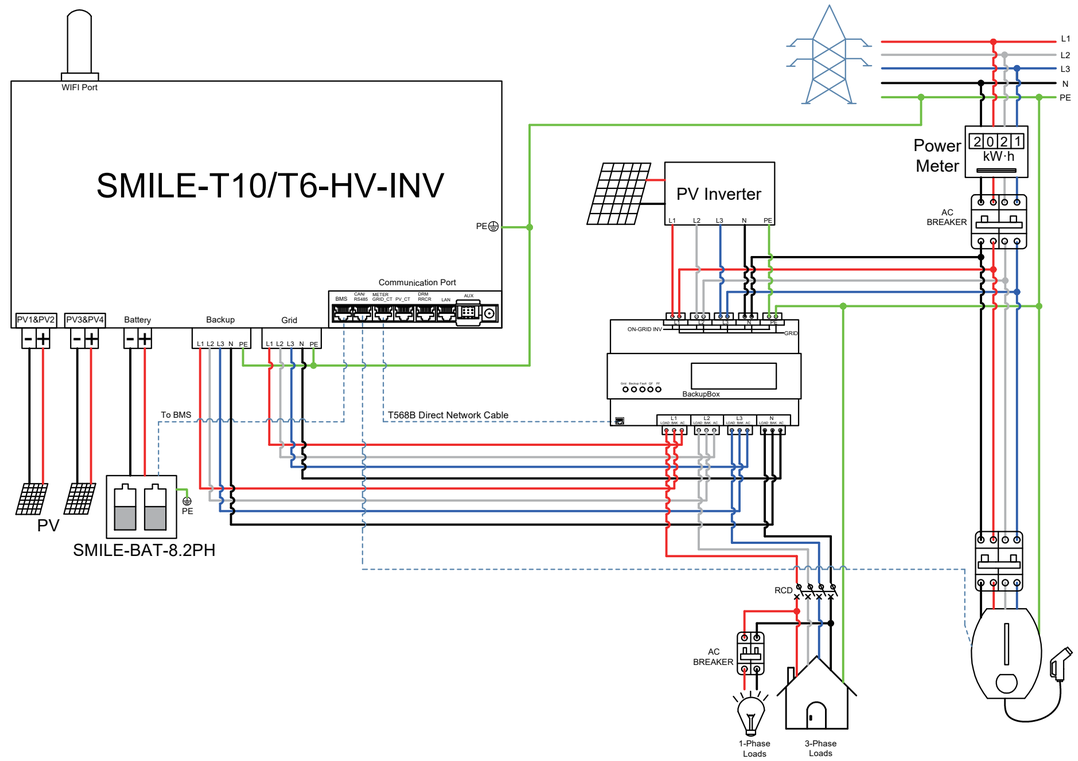

06 SMILE-T10/T6-HV System Wiring Diagram with Backup Box (Heavy Load)

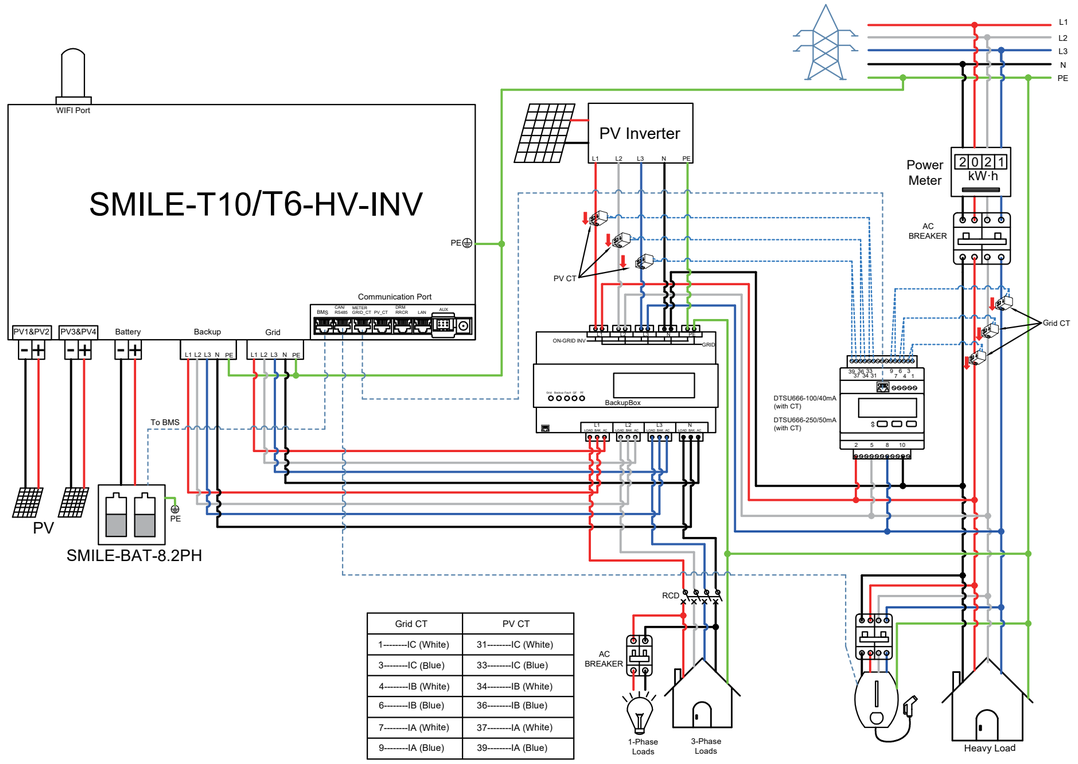

Grid CT	PV CT
1--------IC (White)	31--------IC (White)
3--------IC (Blue)	33--------IC (Blue)
4--------IB (White)	34--------IB (White)
6--------IB (Blue)	36--------IB (Blue)
7--------IA (White)	37--------IA (White)
9--------IA (Blue)	39--------IA (Blue)

64100158-01

Alphaess
your smart energy

@AlphaEnergyStorageSystem @AlphaESS

@alpha_ess @AlphaESS www.alphaess.com